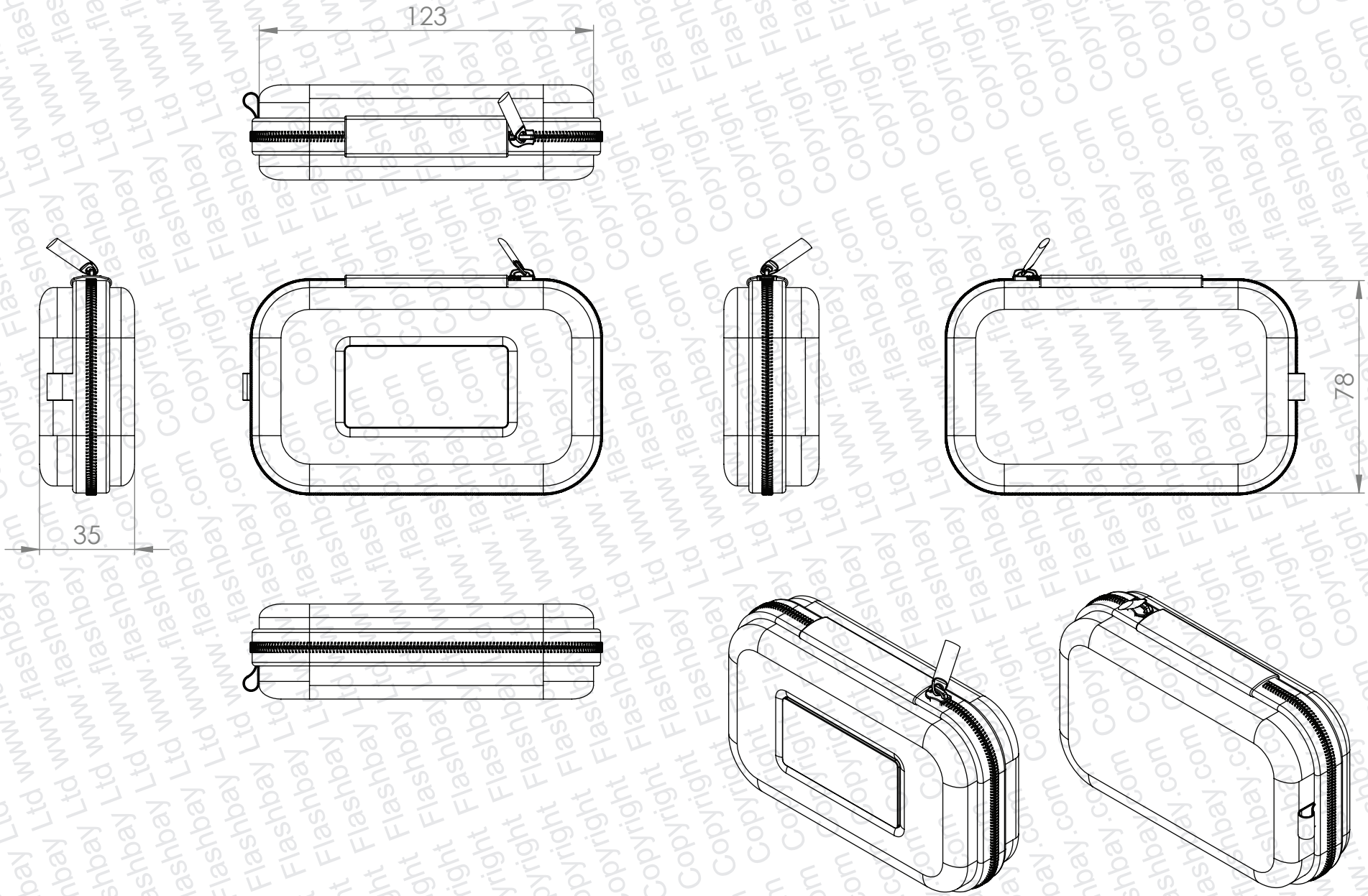

PRODUCT	CODE	DIMENSIONS	SCALE
Gift Case Small	GCS	mm	1 : 2

flashbay®

Copyright Flashbay Ltd www.flashbay.com